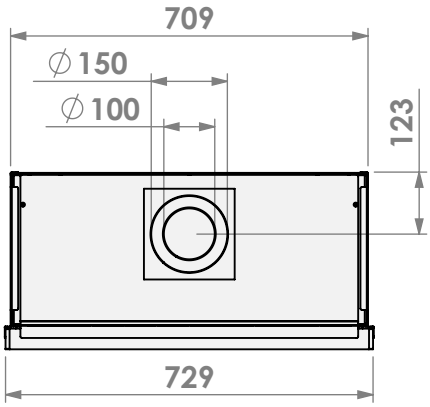

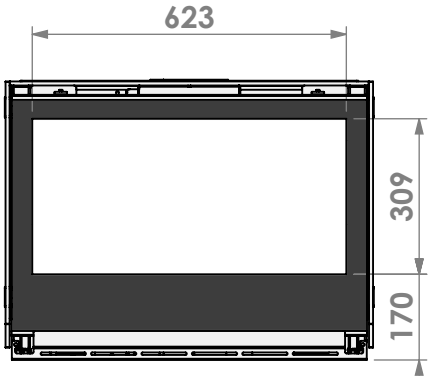

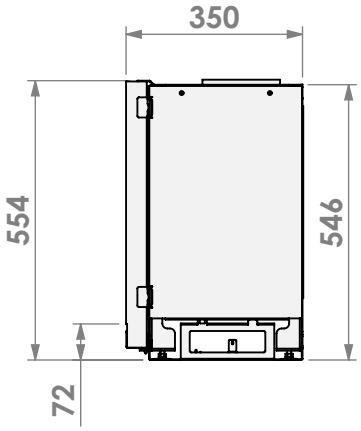

inbouw kader
built-in frame
cadre encastrable
Einbaurahmen

bellfires.
Barbas Bellfires B.V.
Hallenstraat 17
5531 AB Bladel
The Netherlands
www.barbasbellfires.com

Name: Smart Bell 75-55

Modifications reserved

Projection: American

Scale: 1:15

Unit: mm

Version:

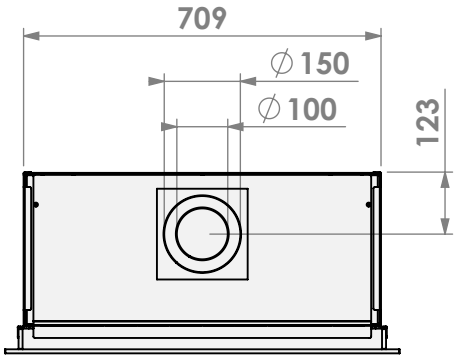

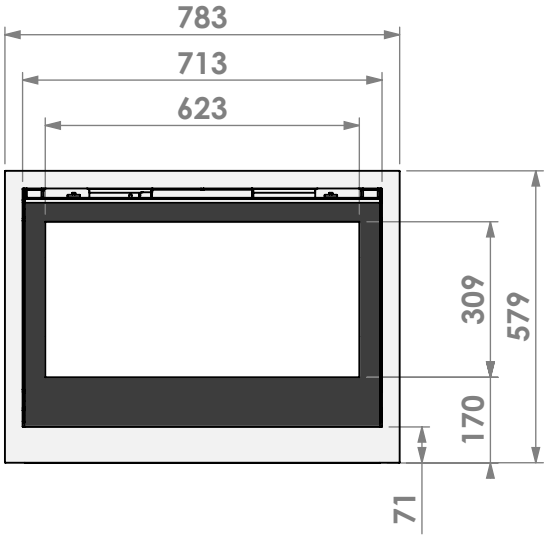

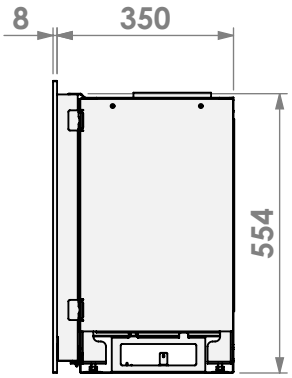

klassiek kader 35mm
classic frame 35mm
cadre classique35mm
klassischer Rahmen 35mm

bellfires.
Barbas Bellfires B.V.
Hallenstraat 17
5531 AB Bladel
The Netherlands
www.barbasbellfires.com

Name: Smart Bell 75-55

Modifications reserved

Projection: American

Scale: 1:15

Unit: mm

Version:

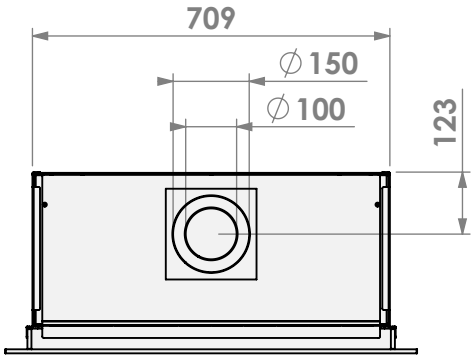

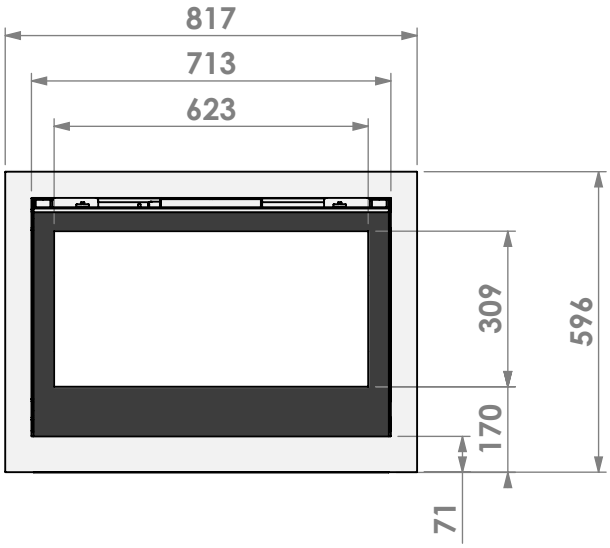

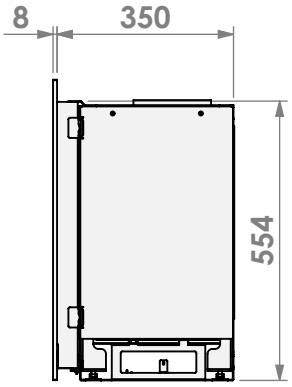

klassiek kader 52mm
classic frame 52mm
cadre classique52mm
klassischer Rahmen 52mm

bellfires.
Barbas Bellfires B.V.
Hallenstraat 17
5531 AB Bladel
The Netherlands
www.barbasbellfires.com

Name: Smart Bell 75-55

Modifications reserved

Projection: American

Scale: 1:15

Unit: mm

Version:

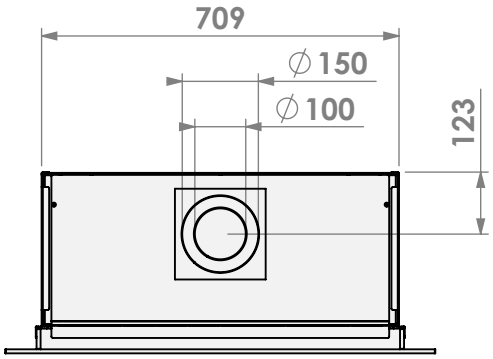

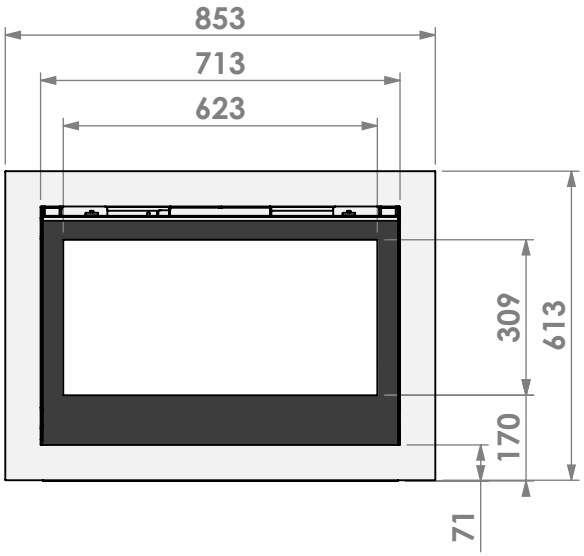

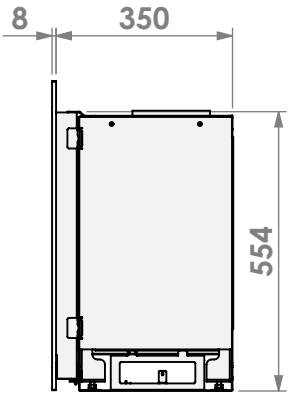

klassiek kader 70mm
classic frame 70mm
cadre classique70mm
klassischer Rahmen 70mm

bellfires.
Barbas Bellfires B.V.
Hallenstraat 17
5531 AB Bladel
The Netherlands
www.barbasbellfires.com

Name: Smart Bell 75-55

Modifications reserved

Projection: American

Scale: 1:15

Unit: mm

Version:

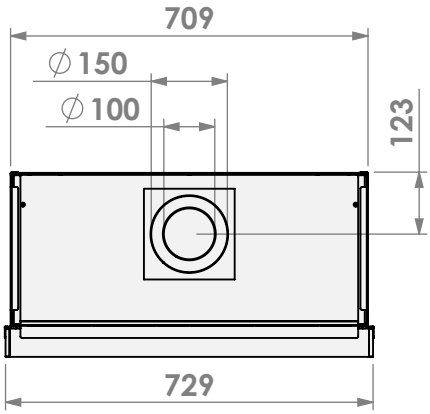

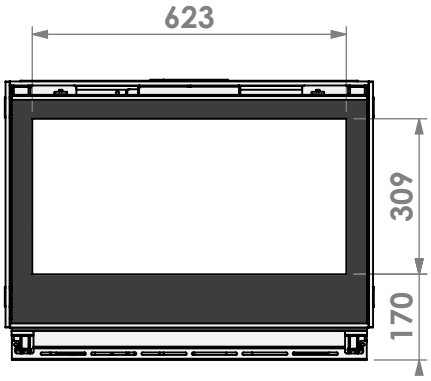

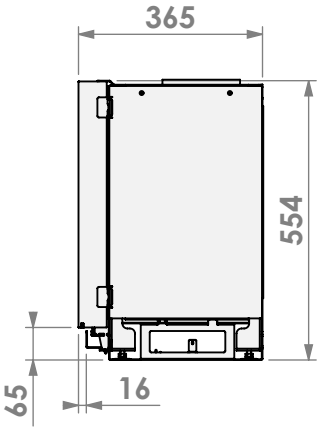

verdiept kader 15mm
insert frame 15mm
cadre de profondeur 15mm
vertiefter Rahmen 15mm

bellfires.
Barbas Bellfires B.V.
Hallenstraat 17
5531 AB Bladel
The Netherlands
www.barbasbellfires.com

Name: Smart Bell 75-55

Modifications reserved

Projection: American

Scale: 1:15

Unit: mm

Version:

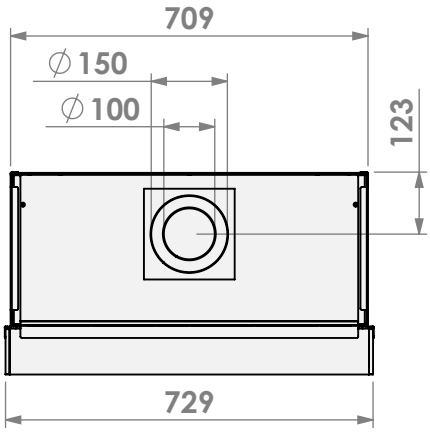

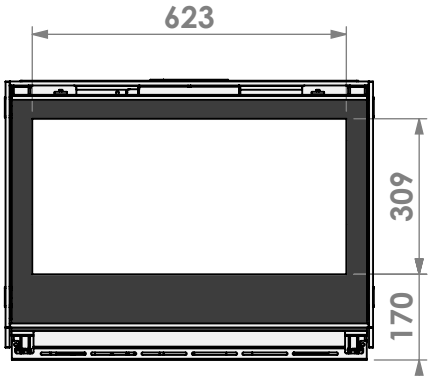

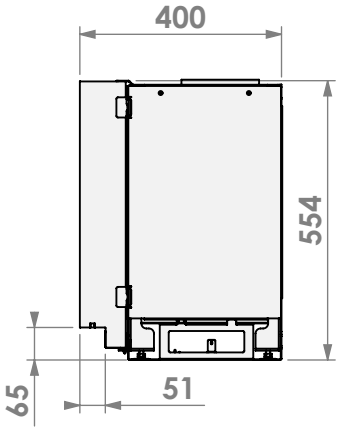

verdiept kader 50mm
insert frame 50mm
cadre de profondeur 50mm
vertiefter Rahmen 50mm

bellfires.
Barbas Bellfires B.V.
Hallenstraat 17
5531 AB Bladel
The Netherlands
www.barbasbellfires.com

Name: Smart Bell 75-55

Modifications reserved

Projection: American

Scale: 1:15

Unit: mm

Version:

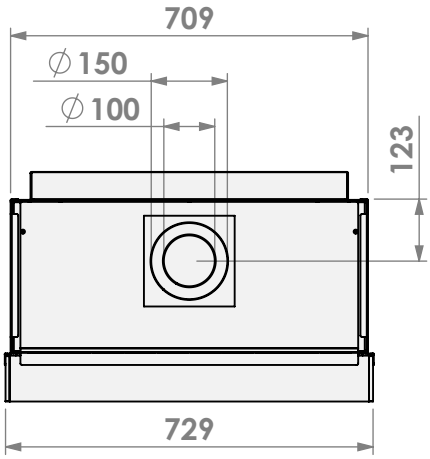

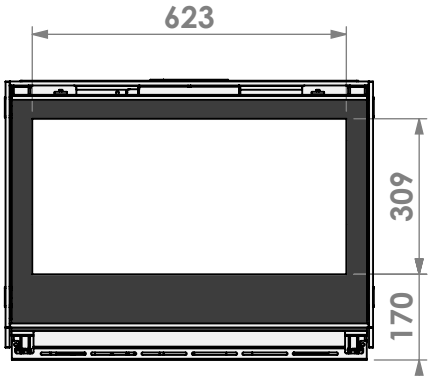

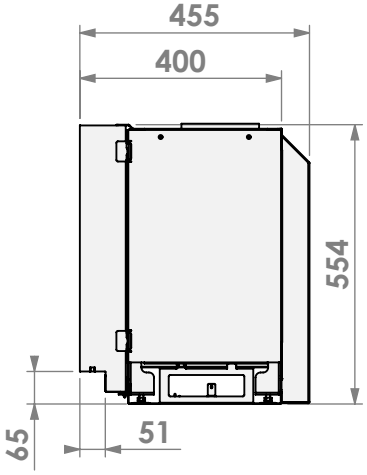

verdiept kader 50mm met convectieventilator
insert frame 50mm with convection ventilator
cadre de profondeur 50mm avec ventilateur de convection
vertiefter Rahmen 50mm mit Konvektionsventilator

bellfires.
Barbas Bellfires B.V.
Hallenstraat 17
5531 AB Bladel
The Netherlands
www.barbasbellfires.com

Name: Smart Bell 75-55

Modifications reserved

Projection: American

Scale: 1:15

Unit: mm

Version: